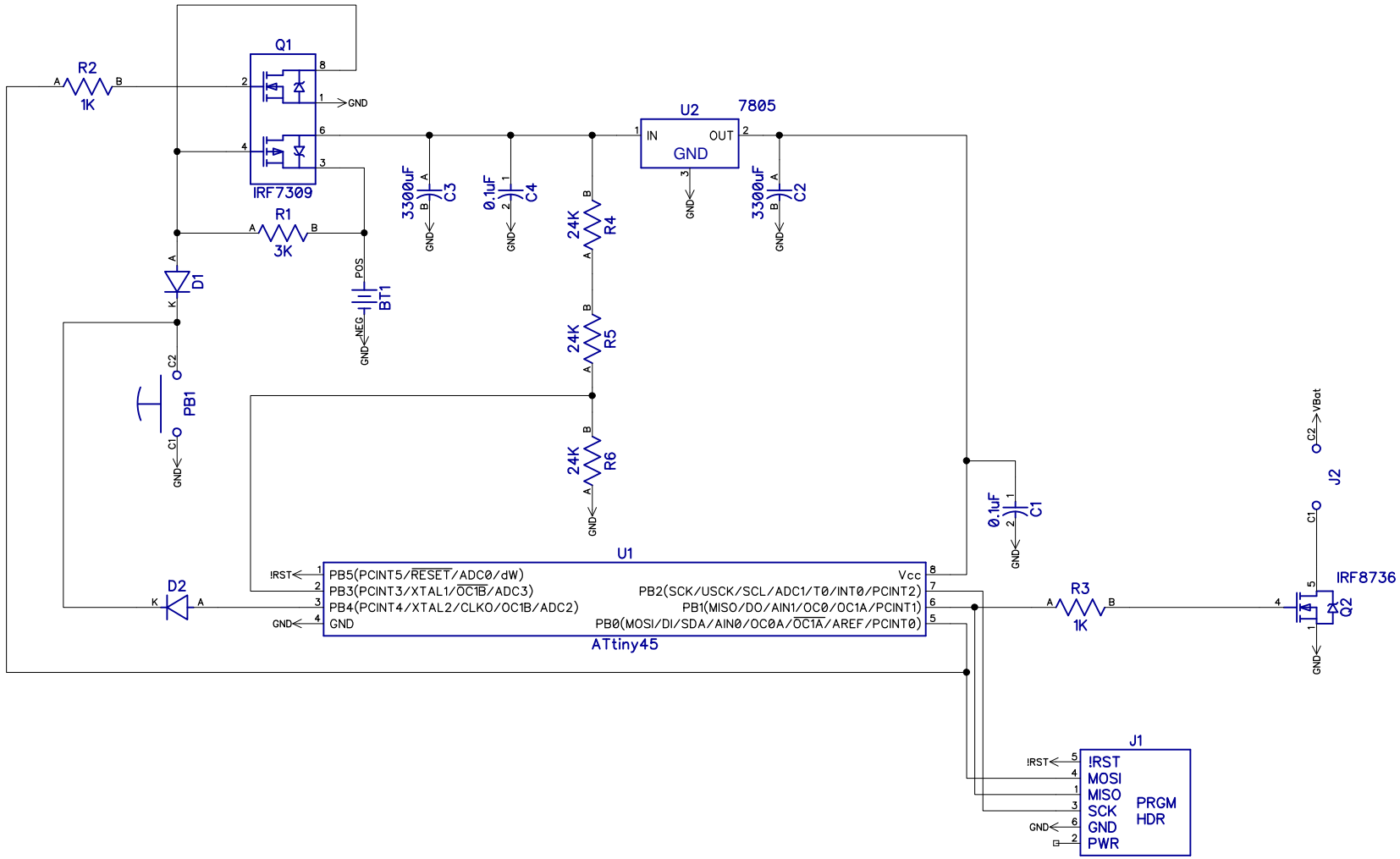

SoftPower V2.0		
Size LTR	By Royce Pipkins	Rev 2
Date 1-28-2010		Drawn by RDP
Filename SoftPower.dch		Sheet 1